P/N: 600344916
REV.: 08/11

PARTS LIST: VACUFLUSH 509+ SERIES

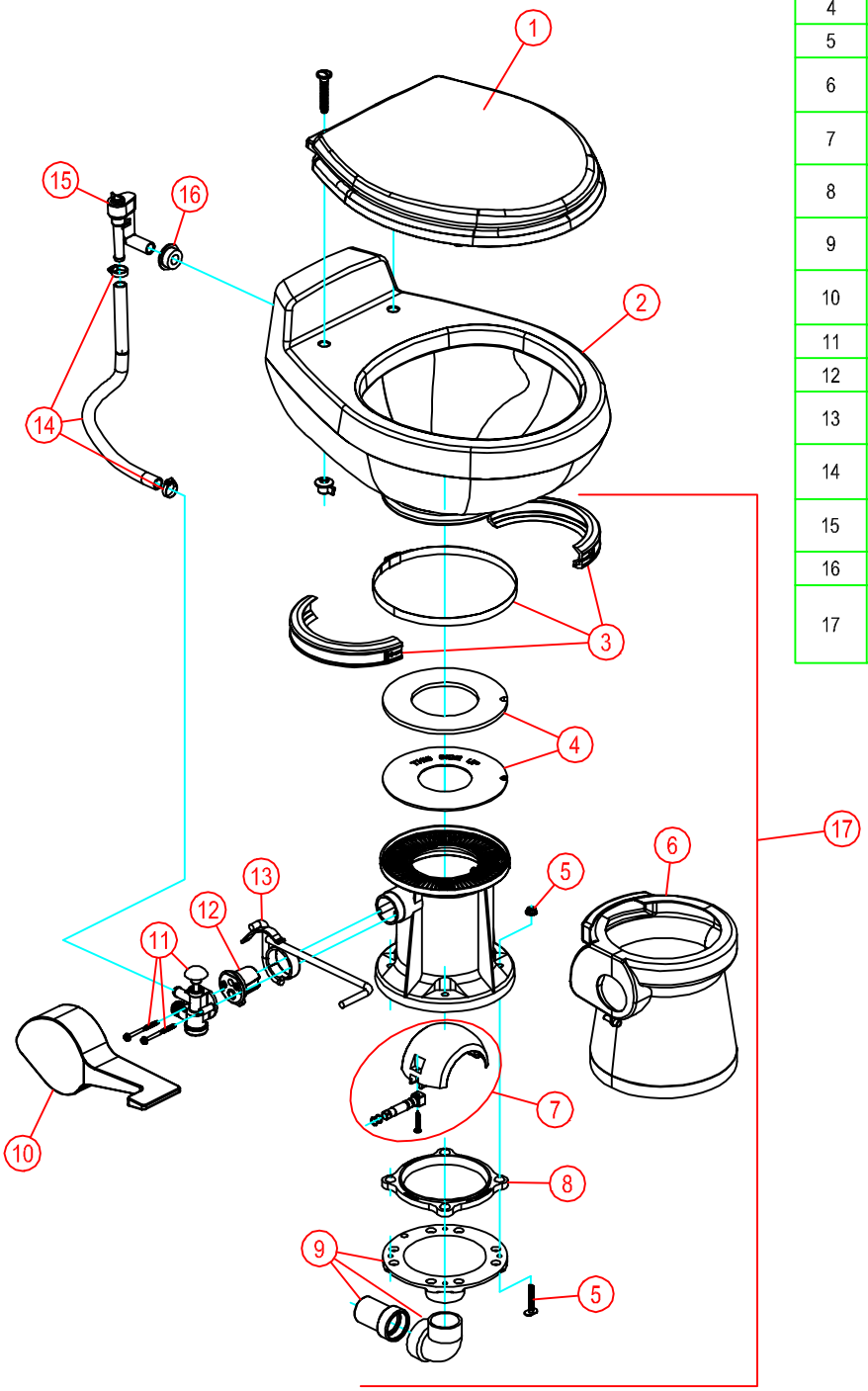

ITEM	PART NUMBER & DESCRIPTION	
1	385343829 385343831	SEAT/COVER - WHITE SEAT/COVER - BONE
2	385310739 385310740	CHINA BOWL KIT - WHITE CHINA BOWL KIT - BONE
3	385310048	BOWL/BASE CLAMP KIT
4	385311462	FLUSH BALL SEAL REP'L KIT
5	385310064	MOUNTING HARDWARE
6	385310111 385310112	PEDESTAL COVER - WHITE PEDESTAL COVER - BONE
7	385318162	FLUSH BALL, SHAFT, CARTRIDGE KIT **INCLUDES ITEM 12
8	385310063	FLOOR FLANGE SEAL **INCLUDES ITEM 5
9	385318864	FUNNEL KIT ('06/'09 MODELS) **INCLUDES ITEM 5 & 8
10	385310114 385310115	PEDAL COVER - WHITE PEDAL COVER - BONE
11	385314349	WATER VALVE KIT
12	385236096	SPRING CARTRIDGE KIT
13	385310578	PEDAL/LEVER & CARTRIDGE KIT **INCLUDES ITEM 12
14	385345377 385340177	BOWL WATER SUPPLY HOSE - WHITE BOWL WATER SUPPLY HOSE - BONE
15	385316906	VACUUM BREAKER KIT **INCLUDES ITEM 16
16	385311164	1/2" SEALING GROMMET
17	385311772 385311892	'09 BASE KIT METAL LEVER - WHITE '09 BASE KIT METAL LEVER - BONE **INCLUDES ITEMS 3-13

Dometic Corporation - Sanitation Systems
13128 State Rt. 226, P.O. Box 38
Big Prairie, OH 44611-0038 USA
Telephone: 330-496-3211
Fax: 330-496-3097
Email: sealand@dometicusa.com